For Residential and Commercial Applications

Job Name _____ Contractor _____

Job Location _____ Approval _____

Engineer _____ Contractor's P.O. No. _____

Approval _____ Representative _____

Series

C1206-TM-WR

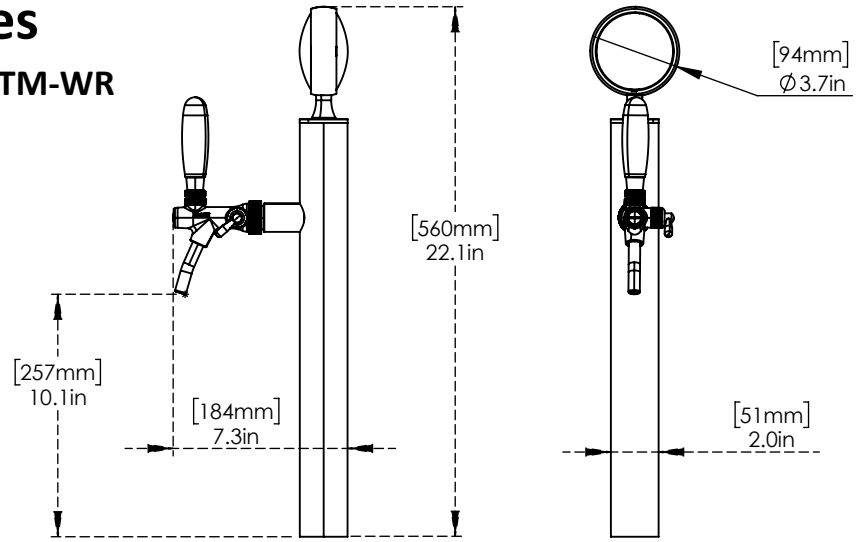



Specifications:

- **Product :** Anthina Slim Tower, Top Medallion
- **Tower Type :** Slim tower
- **Number of Faucets :** 1
- **Body Material :** SS304
- **Finish :** SS Polished (With Wrap Branding)
- **Illumination :** Illuminated, 81mm Lens Medallion at top
- **Power for Illumination :** 24V Transformer, included
- **Cooling Technology :** Glycol recirculation loop
- **Beer Line Tubing :** SS 304, 8 mm OD x 7 mm ID
- **Mounting System :** Through counter
- **Branding :** Custom branding available
- **Application :** Draught beer dispensing, bars, pubs, restaurants, taprooms

Features & Benefits:

- Stainless Steel 304 with SS Polished finish: Durable and reliable, with a modern look that suits any bar.
- Illuminated top medallion: Shows your brand from every angle and makes the tower stand out.
- Glycol recirculation loop: Keeps beer cold up to the faucet, which reduces foam and wasted beer.
- SS 304 beer line (8 mm OD x 7 mm ID): Beer touches only stainless steel, so it stays hygienic and tastes fresh.
- 24V transformer included: The illumination is ready to connect, so no extra power parts are needed.

NOTICE

The information contained herein is not intended to replace the full product installation and safety information available or the experience of a trained product installer. You are required to thoroughly read all installation instructions and product safety information before beginning the installation of this product.

Copyright © 2017 Krome USA Inc. All Rights Reserved

Date:20/11/2026

Revision: 01

Krome product Specifications in U.S. customary units and metric are approximate and are provided for reference only. For precise measurements, please contact Krome Technical Service. Krome
reserves the right to change or modify product design, construction, specifications, or materials without prior notice and without incurring any obligation to make such changes and modifications
on Krome products previously or subsequently sold. For most updated specification sheet, go to